Goodrive200A Series

General Purpose Vector Control Drive

Product Advantage 2
Product Introduction.....3
High Performance.....4
Multi-Function with Simple Operation.....5
Applications 8
Technical Specifications 8
Standard Wiring.....10
Type Selection.....11
Installation Dimensions.....12
Installation Diagram.....13
Optional Parts.....15
Sales Network.....18

Low Voltage Drive Family

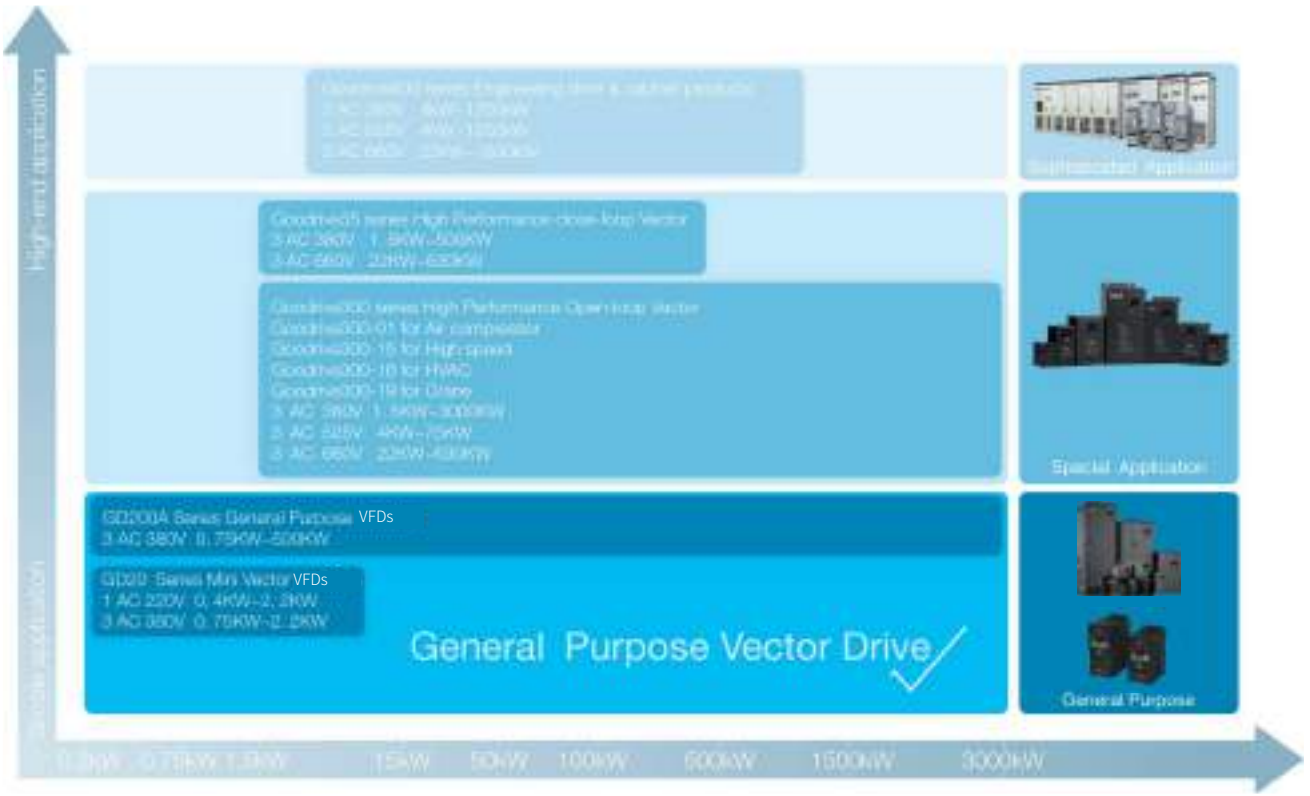

Product Advantage

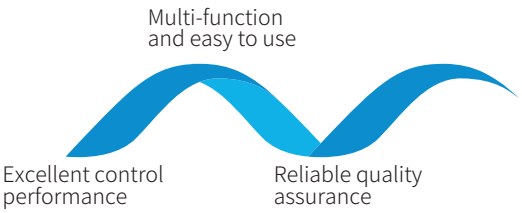

Product Introduction

GD200A series high performance general vector VFD, positioned as a new generation general purpose VFD; products using DSP control system and vector V/F control technology, with excellent motor drive performance and various protecting functions, widely used in air compressor, plastic machine, petroleum industry, coal industry, HVAC applications, fan pump and other standard transmission load.

High Performance

More Accurate Motor Auto-tuning

Accurate rotating and static motor auto-tuning
Convenient debugging and easy operation

Rotating auto-tuning	Static auto-tuning
Need to separate the load Applied to the situation need high control accuracy	Needn't to separate the load Applied to the situation when the load is difficult to separate

Advanced open loop vector control

The current, torque and rotating speed waveforms when sudden loading or unloading in asynchronous motor open loop vector control mode with 0.5Hz running frequency and full load.

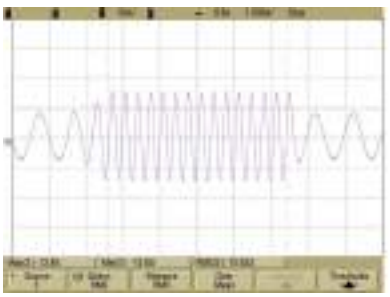

Current

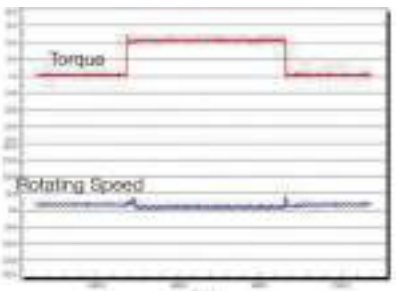

Torque & Rotating speed

Perfect voltage and current control, reducing the fault protection times

OC fault

Adjust the output frequency to avoid overcurrent of the VFD during acceleration

OV fault

Adjust the output frequency to avoid overvoltage of the DC bus during deceleration

Multiple braking modes and instant stopping

Dynamic braking

- Configure braking units and resistors
- Available on the situation of big inertia load and frequent braking
- Big braking torque and quick braking

DC braking

- No need to configure braking units and resistors
- Available on the situation when start the running motor after braking and the situation when keep the moment output after braking to zero speed
- Not available on the situation of big inertia load or instant stopping braking in high speed running

Flux braking

- No need to configure braking units and resistors
- Available on the instant stopping situation with big inertia load and no frequent braking
- Not available on the situation of big inertia load and frequent and braking(the energy consumed on the stator and its cooling is better than DC braking)

Short circuit braking

- No need to configure braking units and resistors, capable of braking quickly
- Applicable to the motors at quick start and stop or restart after braking
- Not applicable to big inertia load and frequent braking

Multi-Function with Simple Operation

Separate Air-duct

The separate air duct prevents the contaminants into the electronic parts/components and greatly improves the protective effect of the VFD, as well as its reliability and service life, to adapt various complicated site environments. It can also facilitate the heat-releasing in control cabinets and the heat-releasing design of the customer.

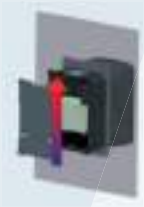

Multiple installation modes

0.75~200kW: Wall mounting and flange mounting
200~315kW: Wall mounting and floor mounting
350~500kW: Floor mounting

Remark: above power ratings are subject to G type machine.

Standard built-in C3 input filters, optional external C2 filters

C3 input filter is embedded in the factory to meet different application requirements,save installation space and avoid electromagnetic interference caused by incorrect selection and site installation.

Remarks:
C2 filter:EMC performance of the VFD achieves the limited usage requirement in civil environment.
C3 filter:EMC performance of the VFD achieves the limited usage requirement in industrial environment.

Book structure

Parallel installation
Smaller installation space with less cost and beautiful appearance.

The rivet design ensures reliable integration connection

Greener Proper grounding
Stronger corrosion-resistance Excellent EMC performance

Smaller Size

Due to the thermal simulation and advanced modularized design, the size of our product is reduced greatly. The width ratio between Goodrive300 and CHF100A is shown in the figure below (the Max. percentage is 50%)

GD200A series

Membrane keypad design (which can be connected to external keypads) is available for VFDs ≤15kW); swappable keypads are standard for VFDs (≥18.5kW)

Abundant terminals

Terminals	Quantity	Features
Digital input	8 channels	1KHz NPN and PNP
High speed Pulse input	1 channel	50KHz NPN and PNP
Analog input	2 channels	0~10V,0~20mA, -10V~+10V
Digital output	1 channel	Max. output frequentcy:1KHz
High speed Pulse output	1 channel	Max. output frequency:50KHz
Analog output	2 channels	0~10V,0~20mA
Relay output	2 channels	3A/250VAC, 1A/30VDC, NO+NC

High Performance Keypad

External LED keypads are standard for VFDs (≥18.5kW) to support parameters upload and download, the maximum external length is 200m and the keypads have digital potentiometers; external keypads are optional for VFDs (≤15kW).

External keypad

LCD keypad

The optional external LCD keypad supports parameters loading and unloading with English.

Available on DC power supply

Reduce the occupied space and decrease the costsign of the customer.

Embedded braking units of 0.75-30kW VFDs

Reduce the occupied space and decrease the costsign of the customer.

Supporting common DC bus

Reduce the power lost on DBR
Note the impact current and the capacity of the input AC system

Function of water supply

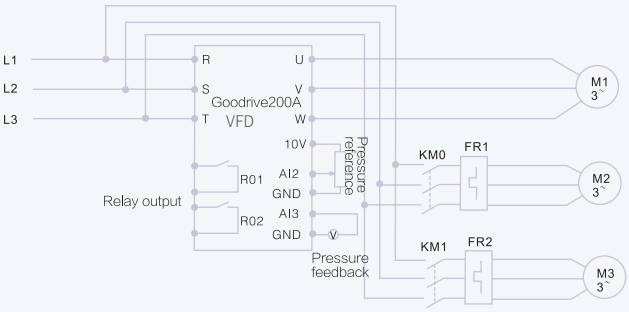

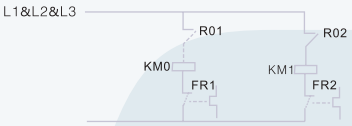

In the diagram above, M2 and M3 are auxiliary motors which are controlled by RO1 and RO2. PID constant-pressure automatic control system is formed by the VFD through pressure feedback. The pressure reference can apply analog or keypad input. Modbus RS-485 communication is also supported.

The product design follows IEC national standards and passes the CE test certification.

Advanced thermal technology makes exact thermal design

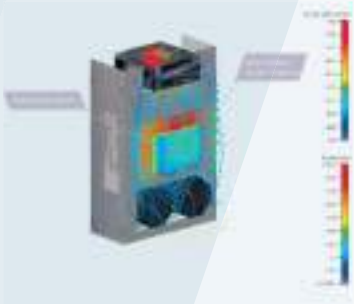

Wide voltage range meets the requirement of grid environment

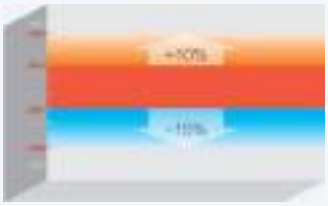

AC 3PH:380V(-15%)-440V(+10%) Wide voltage range

Perfect and reliable test system ensure products adapt complicated site environments

Experiment type	Experiment name	Classification
Mechanical reliability experiments	Package experiments	Package compression experiments
		Package resonance imaging and storage test
		Package random vibration test
		Package dropping test
		Package rolling test
		Package dumping test
		Package inclined impact test
	Impact test	Half-sine wave impulse test(non-working state)
		Trapezoidal wave impulse test (non-working state)
	Vibration test	Sinusoidal vibration test (working state)
		Random vibration test (working and non-working state)
Climatic environmental reliability test	Temperature experiment	Low temperature storage test
		High temperature storage test
		Low temperature experiments
		High temperature experiments
		Temperature gradient experiments
		Temperature impact test
	Thermal test	Constant thermal test
		Alternation thermal test
	Salt spray test	Constant salt spray test
		Alternation salt spray test
	Low air pressure test	Low Air Pressure Test
		Low temperature and low pressure test
		High temperature and low pressure test

Remarks:
INVT is the manufacturer achieved ACT certificate of TÜV SÜD .The full name of ACT is Acceptance of Client's Testing, which means the German TÜV SÜD admit the technology level of the lab and accept their separate testing data and test reports officially.

Electric Vibration System

Low Pressure Test Chamber (L)
Constant Temperature and Humidity Test Chamber (R)

Natural Convection Test Chamber (L)
Thermal Shock Test Chamber (R)

Applications

Air compressor

Oil industry

Warming and water supply

Plastic machine

Mining

Fan and water pump

Technical Specifications

Function		Specification
Input	Input voltage (V)	AC 3PH 220V(-15%)~240V(+10%) AC 3PH 380V(-15%)~440V(+10%) AC 3PH 520V(-15%)~690V(+10%)
	Input frequency (Hz)	50Hz or 60Hz Allowed range: 47~63Hz
Output	Output frequency (Hz)	0~400Hz
Technical control feature	Control mode	V/F SVC
	Motor type	Asynchronous motor
	Speed ratio	Asynchronous motor 1:100
	Overload capability	G type: 150% of rated current: 1 minute 180% of rated current: 10 seconds 200% of rated current: 1 second P type: 120% of rated current: 60 second
Running control feature	Frequency setting	Digital setting, analog setting, pulse frequency setting, multi-step speed running setting, simple PLC setting, PID setting, MODBUS communication setting, PROFIBUS communication setting. Realize the shifting between the set combination and set channel.
	Auto voltage adjustment	Keep a stable voltage automatically when the grid voltage transients
	Fault protection	Provide over 30 fault protection functions: overcurrent, overvoltage, undervoltage, overheating, phase loss and overload, etc.
	Speed tracking	Restart the rotating motor smoothly
Peripheral interface	Terminal analog input resolution	≤10mV
	Terminal switch input resolution	≤ 2ms
	Analog input	2 channels (AI1, AI2) 0~10V/0~20mA and 1 channel (AI3) -10~10V
	Analog output	2 channels (AO1, AO2) 0~10V /0~20mA
	Digital input	8 channels common input, the Max. frequency: 1kHz 1 channel high speed input, the Max. frequency: 50kHz
	Digital output	1 channel high speed pulse output, the Max. frequency: 50kHz; 1 channel Y terminal open collector pole output
	Relay output	2 channels programmable relay output RO1A NO, RO1B NC, RO1C common terminal RO2A NO, RO2B NC, RO2C common terminal Contactor capacity: 3A/250VAC,1A/30VDC
Others	Mountable method	Wall, flange and floor mountable
	Temperature of the running environment	-10~50°C, derate above 40°C
	Ingress protection	IP20
	Cooling	Air-cooling
	Braking unit	Built-in braking unit for below 30G/37P (including 30G/37P) Optional External braking unit for others
	Braking resister	External braking
	EMC filter	Built-in C3 filter: meet the degree requirement of IEC61800-3 C3 Optional external filter, meet the degree requirement of IEC61800-3 C2

Standard Wiring

Wiring diagram of the main circuit

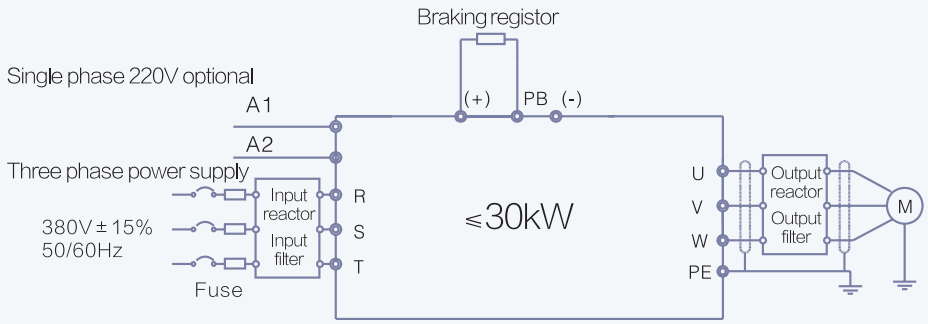

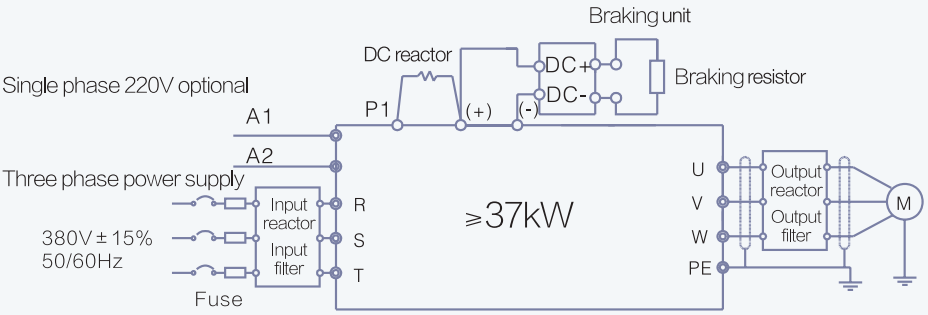

Wiring diagram of the control board

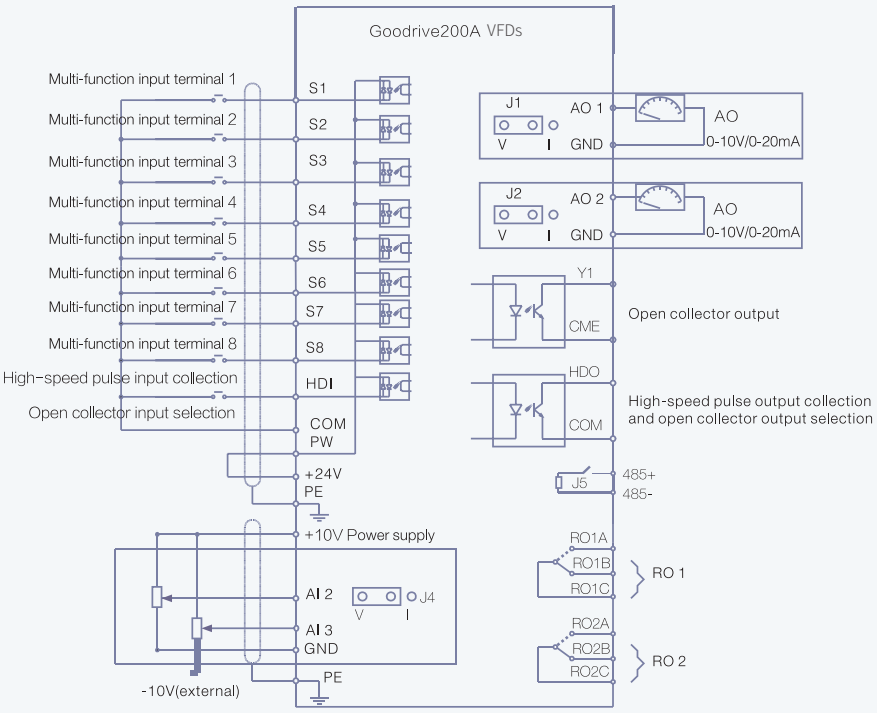

Type Selection

Power ratings and dimension

VFD model	Rated output power (kW)	Input current (A)	Rated output current (A)	Gross weight (kg)	Packaging dimension (mm)
3-phase 220VAC±15%					
GD200A-0R7G-2	0.75	5	4.5	4.1kg	360x250x265
GD200A-1R5G-2	1.5	7.7	7		
GD200A-2R2G-2	2.2	11	10		
GD200A-004G-2	3.7	17	16	7.4kg	445x295x320
GD200A-5R5G-2	5.5	21	20		
GD200A-7R5G-2	7.5	31	30		
GD200A-011G-2	11	43	42	11kg	550x375x375
GD200A-015G-2	15	56	55		
GD200A-018G-2	18.5	71	70	32kg	695x410x470
GD200A-022G-2	22	81	80		
GD200A-030G-2	30	112	110		
GD200A-037G-2	37	132	130	67kg	760x445x580
GD200A-045G-2	45	163	160		
GD200A-055G-2	55	181	190		
3-phase 380VAC±15%					
GD200A-0R7G-4	0.75	3.4	2.5	2.5kg	275 x205 x235
GD200A-1R5G-4	1.5	5.0	3.7		
GD200A-2R2G-4	2.2	5.8	5		
GD200A-004G/5R5P-4	4/5.5	13.5/19.5	9.5/14	4.1kg	360 x250 x265
GD200A-5R5G/7R5P-4	5.5/7.5	19.5/25	14/18.5		
GD200A-7R5G/011P-4	7.5/11	25/32	18.5/25	7.4kg	445 x295 x320
GD200A-011G/015P-4	11/15	32/40	25/32		
GD200A-015G/018P-4	15/18.5	40/47	32/38		
GD200A-018G/022P-4	18.5/22	47/56	38/45	9kg	460 x340 x330
GD200A-022G/030P-4	22/30	56/70	45/60	11kg	550 x375x375
GD200A-030G/037P-4	30/37	70/80	60/75		
GD200A-037G/045P-4	37/45	80/94	75/92	32kg	695 x410x470
GD200A-045G/055P-4	45/55	94/128	92/115		
GD200A-055G/075P-4	55/75	128/160	115/150		
GD200A-075G/090P-4	75/90	160/190	150/180	67kg	760 x445 x580
GD200A-090G/110P-4	90/110	190/225	180/215		
GD200A-110G/132P-4	110/132	225/265	215/260		
GD200A-132G/160P-4	132/160	265/310	260/305	110kg	971 x631 x565
GD200A-160G/185P-4	160/185	310/345	305/340		
GD200A-185G/200P-4	185/200	345/385	340/380		
GD200A-200G/220P-4	200/220	385/430	380/425		
GD200A-220G/250P-4	220/250	430/485	425/480	165kg	1086x826x595
GD200A-250G/280P-4	250/280	485/545	480/530		
GD200A-280G/315P-4	280/315	545/610	530/600		
GD200A-315G/355P-4	315/355	610/625	600/650		
GD200A-355G/400P-4	355/400	625/715	650/720	450kg	1850x840x820
GD200A-400G-4	400	715	720		
GD200A-500G-4	500	890	860		

Remarks:
(1)The input current of the VFD 0.75G-315G/350P is tested when the input voltage is 380V and there is no DC reactor and output/input reactor.
(2)The current of the VFD 350G/400P-500G is tested when the input voltage is 380V and there is input reactor.
(3)Rated output current is defined when the rated output voltage is 380V.

Installation Dimensions

Wall mounting

(unit: mm)

Model		W1	W2	H1	H2	D1	Installation holes
3-phase 220VAC series	0.75kW~2.2kW	146	131	256	243.5	181	6
	4kW~7.5kW	170	151	320	303.5	216	6
	11kW~15kW	255	237	407	384	245	7
	18.5kW ~30kW	270	130	555	540	325	7
	37kW~55kW	325	200	680	661	365	9.5
3-phase 380VAC series	0.75kW~2.2kW	126	115	186	175	155	5
	4kW~5.5kW	146	131	256	243.5	171	6
	7.5kW~15kW	170	151	320	303.5	199.6	6
	18.5kW	230	210	342	311	219.4	6
	22kW~30kW	255	237	407	384	245.6	7
	37kW~55kW	270	130	555	540	332.6	7
	75kW~110kW	325	200	680	661	373.6	9.5
	132kW~200kW	500	180	870	850	368.4	11
	220kW~315kW	680	230	960	926	387.9	13

Flange mounting

(unit: mm)

VFD model		W1	W1	W3	W4	H1	H2	H3	H4	D1	D2	Installation holes
3-phase 220VAC series	0.75kW~2.2kW	170.2	131	150	9.5	292	276	260	6	167	84.5	6
	4kW~7.5kW	191.2	151	174	11.5	370	351	324	15	196.3	113	6
	11kW~15kW	275	237	259	11	445	426	404	10	245	119	7
	18.5kW ~30kW	270	130	261	11	445	426	404	10	245	119	7
	37kW~55kW	325	200	317	58.5	680	661	626	23	363	182	9.5
3-phase 380VAC series	0.75kW~2.2kW	150.2	115	130	7.5	234	220	190	13.5	155	65.5	5
	4kW~5.5kW	170.2	131	150	9.5	292	276	260	6	171	84.5	6
	7.5kW~15kW	191.2	151	174	11.5	370	351	324	12	199.6	113	6
	18.5kW	250	210	234	12	375	356	334	10	219.4	108	6
	22kW~30kW	275	237	259	11	445	426	404	10	245	119	7
	37kW~55kW	270	130	261	65.5	555	540	516	17	332.6	167	7
	75kW~110kW	325	200	317	58.5	680	661	626	23	373.6	182	9.5
	132kW~200kW	500	180	480	60	870	850	796	37	368.4	178.5	11

Floor mounting

(unit: mm)

VFD model	W1	W1	W3	W4	H1	H2	D1	D2	Installation holes
220kW~315W	750	230	714	680	1410	1390	380	150	13\12
355kW~500kW	620	230	553	-	1700	1678	560	240	22\12

Installation Diagram

3-phase 220VAC series Wall Mounting for 0.75-55kW VFDs

0.75-7.5kW Installation diagram

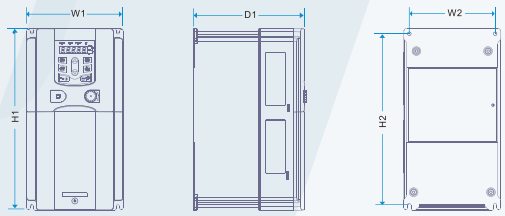

11-15kW Installation diagram

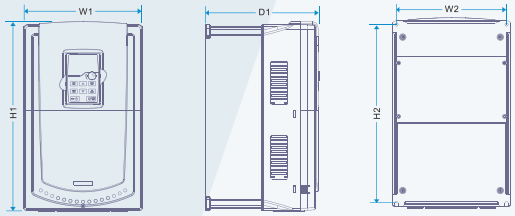

18.5-55kW Installation

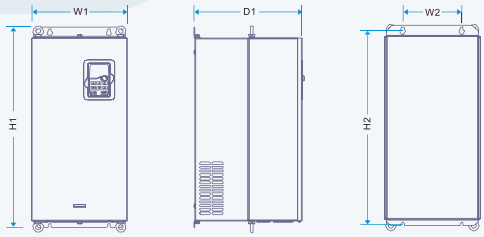

3-phase 380VAC series Wall Mounting for 0.75-315kW VFDs

0.75-15kW Wall mounting Installation diagram

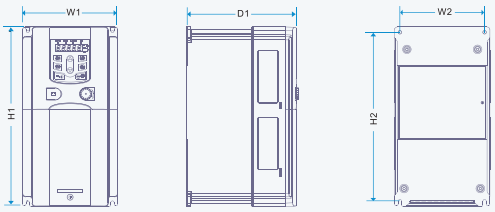

18.5-30kW Wall mounting Installation diagram

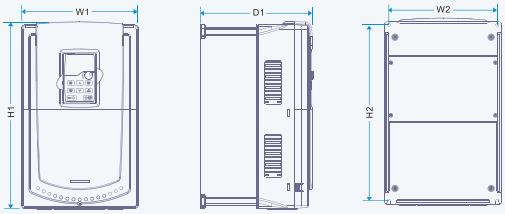

37-110kW Wall mountingInstallation diagram

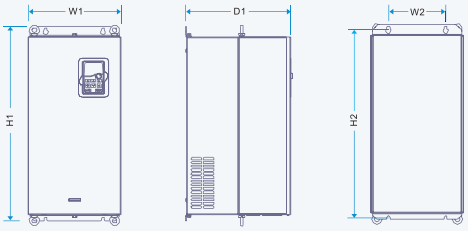

132-200kW Wall mounting Installation diagram

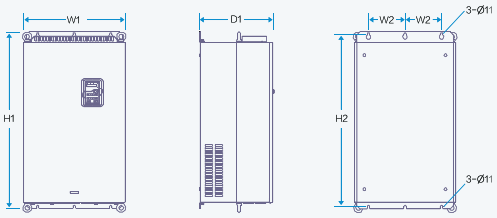

220-315kW Wall mounting Installation diagram

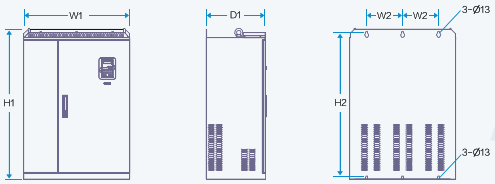

3-phase 220VAC series Flange Mounting for 0.75-55kW VFDs

0.75-7.5kW Flange mounting installation diagram

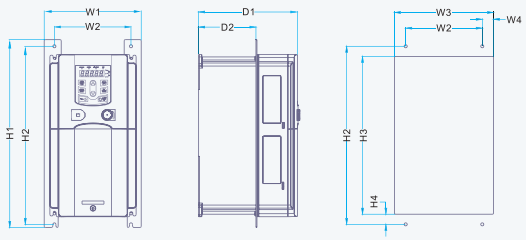

11-15kW Flange mounting installation diagram

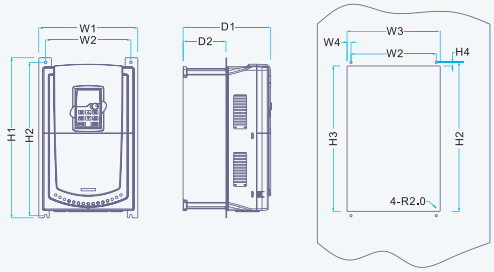

18.5-55kW Flange mounting installation diagram

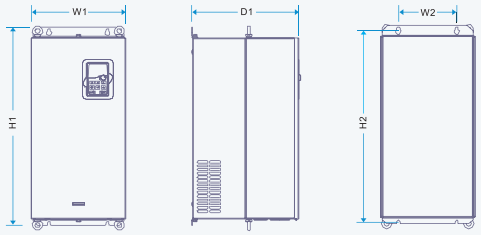

3-phase 380VAC series Flange Mounting for 0.75-200kW VFDs

0.75-15kW Flange mounting Installation diagram

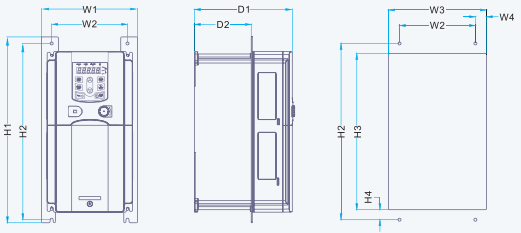

18.5-30kW Flange mounting Installation diagram

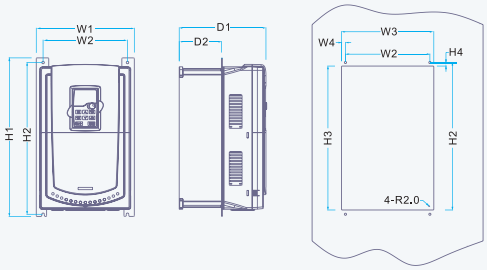

37-110kW Flange mounting Installation diagram

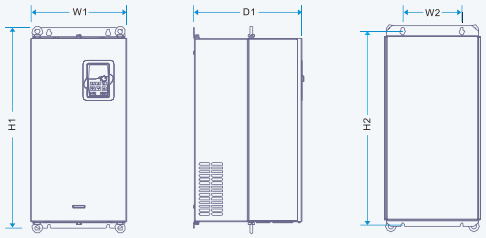

132-200kW Flange mounting Installation diagram

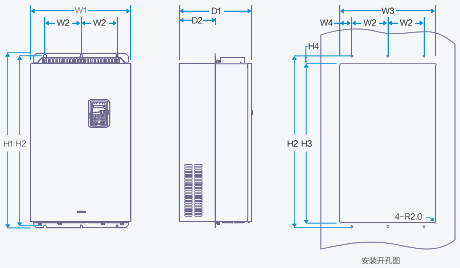

Floor Mounting for 200-500kW VFDs

220-315kW Floor mounting Installation diagram

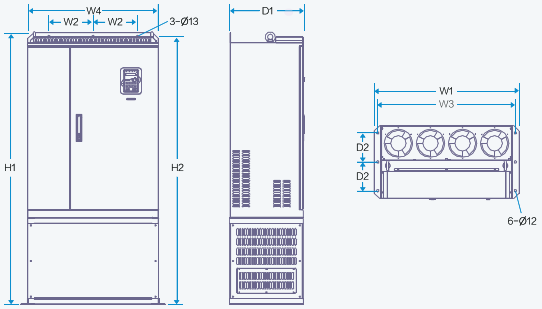

355-500kW Floor mounting Installation diagram

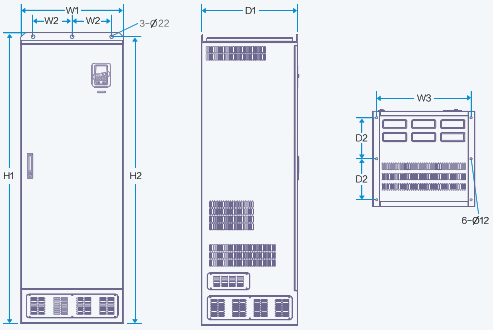

Dimensions for Keypad

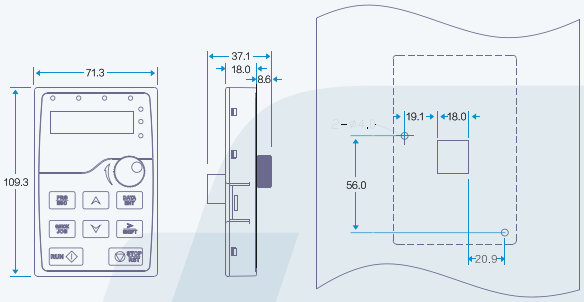

Optional Parts

Flange mounting panel

Needed for 0.75G-30G//37P VFDs.
Not needed for 37G/40P-200G//220P VFDs.

Installation bracket for the keypad

Installation bracket or M3 screw can be used in the installation of external keypad.
The bracket of 0.75G-30G//37P VFDs is standard.
The bracket of 37G/40P-500G VFDs is optional

LCD keypad

10 rows of high definition displaying
Compatible with the LED keypad

Installation base

Only optional in 220G/250P-315G/350P VFDs .Its bases can be built in an input AC (or DC) reactor or an output AC reactor

Heat-releasing hole

VFD needs to derate when selecting a cover consult with the INVT technicians for the detailed information.

AC single-phase 220V input auxiliary power supply

For more convenient debugging

Filters

VFD model		Input filter	Output filter
GD200A 3-phase 380VAC Series	G:0.75—2.2kW	FLT-P04006L-B	FLT-L04006L-B
	G:4—5.5kW P:5.5—7.5kW	FLT-P04016L-B	FLT-L04016L-B
	G:7.5—11kW P:11—15kW	FLT-P04032L-B	FLT-L04032L-B
	G:15—18.5kW P:18.5—22kW	FLT-P04045L-B	FLT-L04045L-B
	G:22—30kW P:30—37kW	FLT-P04065L-B	FLT-L04065L-B
	G:37—45kW P:45—55kW	FLT-P04100L-B	FLT-L04100L-B
	G:55—75kW P:75—90kW	FLT-P04150L-B	FLT-L04150L-B
	G:90kW P:110kW	FLT-P04200L-B	FLT-L04200L-B
	G:110—132kW P:132—160kW	FLT-P04250L-B	FLT-L04250L-B
	G:160—200kW P:185—220kW	FLT-P04400L-B	FLT-L04400L-B
	G:220—280kW P:250—315kW	FLT-P04600L-B	FLT-L04600L-B
	G:315—400kW P:355-400kW	FLT-P04800L-B	FLT-L04800L-B
	G:450——500kW	FLT-P041000L-B	FLT-L041000L-B

Remarks: IEC61800-3 C2 degree requirement can be achieved by using the external filters.

Reactor

The VFDs of 37G/45P and above can be connected with external DC reactor. The reactor can improve the power factor and avoid damage to the recitifier bridge caused by overcurrent and damage to the rectifier circuit by harmonic

VFD model	Input reactor		DC reactor	Output reactor	
	G-type	P-type		G-type	P-type
GD200A-0R7G-4	GDL-ACL0005-4CU	/	/	GDL-OCL0005-4CU	/
GD200A-1R5G-4	GDL-ACL0005-4CU	/	/	GDL-OCL0005-4CU	/
GD200A-2R2G-4	GDL-ACL0006-4CU	/	/	GDL-OCL0006-4CU	/
GD200A-004G/5R5P-4	GDL-ACL0014-4CU	GDL-ACL0020-4CU	/	GDL-OCL0010-4CU	GDL-OCL0014-4CU
GD200A-5R5G/7R5P-4	GDL-ACL0020-4CU	GDL-ACL0025-4CU	/	GDL-OCL0014-4CU	GDL-OCL0020-4CU
GD200A-7R5G/011P-4	GDL-ACL0025-4CU	GDL-ACL0035-4AL	/	GDL-OCL0020-4CU	GDL-OCL0025-4CU
GD200A-011G/015P-4	GDL-ACL0035-4AL	GDL-ACL0040-4AL	/	GDL-OCL0025-4CU	GDL-OCL0035-4AL
GD200A-015G/018P-4	GDL-ACL0040-4AL	GDL-ACL0051-4AL	/	GDL-OCL0035-4AL	GDL-OCL0040-4AL
GD200A-018G/022P-4	GDL-ACL0051-4AL	GDL-ACL0051-4AL	/	GDL-OCL0040-4AL	GDL-OCL0050-4AL
GD200A-022G/030P-4	GDL-ACL0051-4AL	GDL-ACL0070-4AL	/	GDL-OCL0050-4AL	DL-OCL0060-4AL
GD200A-030G/037P-4	GDL-ACL0070-4AL	GDL-ACL0090-4AL	/	GDL-OCL0060-4AL	GDL-OCL0075-4AL
GD200A-037G/045P-4	GDL-ACL0090-4AL	GDL-ACL0110-4AL	GDL-DCL0100-4AL	GDL-OCL0075-4AL	GDL-OCL0092-4AL
GD200A-045G/055P-4	GDL-ACL0110-4AL	GDL-ACL0150-4AL	GDL-DCL0125-4AL	GDL-OCL0092-4AL	GDL-OCL0115-4AL
GD200A-055G/075P-4	GDL-ACL0150-4AL	GDL-ACL0150-4AL	GDL-DCL0160-4AL	DL-OCL0115-4AL	GDL-OCL0150-4AL
GD200A-075G/090P-4	GDL-ACL0150-4AL	GDL-ACL0220-4AL	GDL-DCL0210-4AL	GDL-OCL0150-4AL	GDL-OCL0220-4AL
GD200A-090G/110P-4	GDL-ACL0220-4AL	GDL-ACL0220-4AL	GDL-DCL0210-4AL	GDL-OCL0220-4AL	GDL-OCL0220-4AL
GD200A-110G/132P-4	GDL-ACL0220-4AL	GDL-ACL0265-4AL	GDL-DCL0255-4AL	GDL-OCL0220-4AL	GDL-OCL0265-4AL
GD200A-132G/160P-4	GDL-ACL0265-4AL	GDL-ACL0330-4AL	GDL-DCL0300-4AL	GDL-OCL0265-4AL	GDL-OCL0330-4AL
GD200A-160G/185P-4	GDL-ACL0330-4AL	GDL-ACL0390-4AL	GDL-DCL0365-4AL	GDL-OCL0330-4AL	GDL-OCL0400-4AL
GD200A-185G/200P-4	GDL-ACL0390-4AL	GDL-ACL0390-4AL	GDL-DCL0455-4AL	GDL-OCL0400-4AL	GDL-OCL0400-4AL
GD200A-200G/220P-4	GDL-ACL0390-4AL	GDL-ACL0450-4AL	GDL-DCL0455-4AL	GDL-OCL0400-4AL	GDL-OCL0450-4AL
GD200A-220G/250P-4	GDL-ACL0450-4AL	GDL-ACL0500-4AL	GDL-DCL0505-4AL	GDL-OCL0450-4AL	GDL-OCL0500-4AL
GD200A-250G/280P-4	GDL-ACL0500-4AL	GDL-ACL0500-4AL	GDL-DCL0550-4AL	GDL-OCL0500-4AL	GDL-OCL0560-4AL
GD200A-280G/315P-4	GDL-ACL0500-4AL	GDL-ACL0580-4AL	GDL-DCL0675-4AL	GDL-OCL0560-4AL	GDL-OCL0660-4AL
GD200A-315G/355P-4	GDL-ACL0580-4AL	GDL-ACL0660-4AL	GDL-DCL0675-4AL	GDL-OCL0660-4AL	GDL-OCL0660-4AL
GD200A-355G/400P-4	Standard	Standard	GDL-DCL0810-4AL	GDL-OCL0660-4AL	GDL-OCL0720-4AL
GD200A-400G-4	Standard	/	GDL-DCL0810-4AL	GDL-OCL0720-4AL	/
GD200A-450G-4	Standard	/	GDL-DCL1000-4AL	GDL-OCL0820-4AL	/
GD200A-500G-4	Standard	/	GDL-DCL1000-4AL	GDL-OCL1000-4AL	/

Braking system

The 380V VFDs ≤30G/37P and 220V VFDs ≤15G are build-in braking unit for standard, the others are external braking unit for optional, please choosing the resistor and power of braking resistor for site situation(require of braking torque and amount). Braking resistor can increase braking torque of VFD , In the table it designs the resistor power according to 100% braking torque,10% braking count, 50% braking count, 80% braking count; and customers can choose braking system according to specific process and work condition.

VFD model	Braking unit model	100% braking torque fit braking resisters(Ω)	Power of braking resister(kW) (10% braking count)	Power of braking resister(kW) (50% braking count)	Power of braking resister(kW) (80% braking count)	Allowing minimum braking resister(Ω)
GD200A-0R7G-4	built-in braking unit	653	0.1	0.6	0.9	240
GD200A-1R5G-4		326	0.23	1.1	1.8	170
GD200A-2R2G-4		222	0.33	1.7	2.6	130
GD200A-004G/5R5P-4		122	0.6	3	4.8	80
GD200A-5R5G/7R5P-4		89	0.75	4.1	6.6	60
GD200A-7R5G/011P-4		65	1.1	5.6	9	47
GD200A-011G/015P-4		44	1.7	8.3	13.2	31
GD200A-015G/018P-4		32	2	11	18	23
GD200A-018G/022P-4		27	3	14	22	19
GD200A-022G/030P-4		22	3	17	26	17
GD200A-030G/037P-4		16	5	23	36	17
GD200A-037G/045P-4	DBU100H-060-4	13	6	28	44	11.7
GD200A-045G/055P-4	DBU100H-110-4	10	7	34	54	6.4
GD200A-055G/075P-4		8	8	41	66	
GD200A-075G/090P-4		6.5	11	56	90	
GD200A-090G/110P-4	DBU100H-160-4	5.4	14	68	108	4.4
GD200A-110G/132P-4		4.5	17	83	132	
GD200A-132G/160P-4	DBU100H-220-4	3.7	20	99	158	3.2
GD200A-160G/185P-4	DBU100H-320-4	3.1	24	120	192	2.2
GD200A-185G/200P-4		2.8	28	139	222	
GD200A-200G/220P-4		2.5	30	150	240	
GD200A-220G/250P-4	DBU100H-400-4	2.2	33	165	264	1.8
GD200A-250G/280P-4		2.0	38	188	300	
GD200A-280G/315P-4	Two DBU100H-320-4	3.6*2	21*2	105*2	168*2	2.2*2
GD200A-315G/355P-4		3.2*2	24*2	118*2	189*2	
GD200A-355G/400P-4		2.8*2	27*2	132*2	210*2	
GD200A-400G-4		2.4*2	30*2	150*2	240*2	
GD200A-450G-4	Two DBU100H-400-4	2.2*2	34*2	168*2	270*2	1.8*2
GD200A-500G-4		2*2	38*2	186*2	300*2	

Sales Network

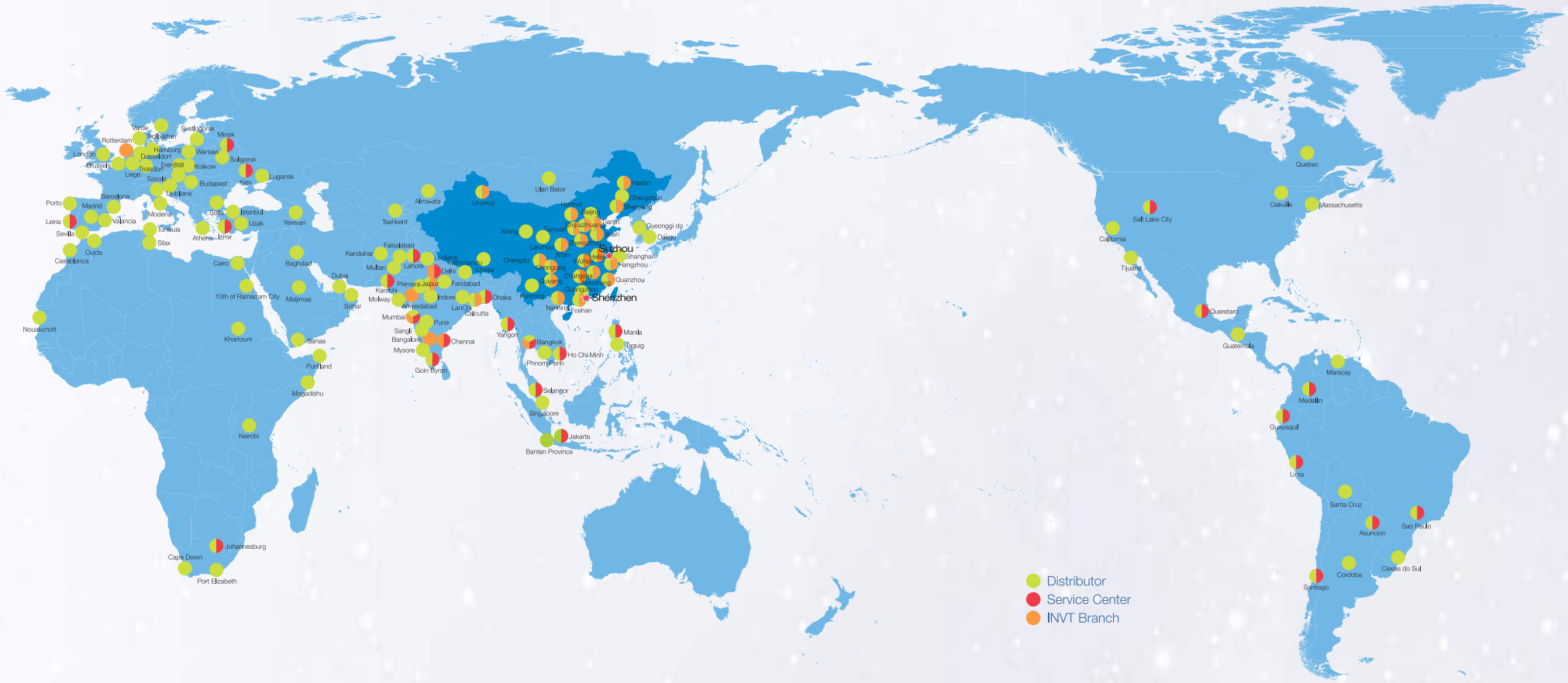

Your Trusted Industry Automation Solution Provider

@invtelectric

E-mail:overseas@invt.com.cn Website:www.invt.com

SHENZHEN INVT ELECTRIC CO.,LTD. INVT Guangming Technology Building, Songbai Road, Matian, Guangming District, Shenzhen, China

Industrial Automation:
- HMI
- PLC
- VFD
- Servo System
- Elevator Intelligent Control System
- Rail Transit Traction System

Electric Power:
- UPS
- DCIM
- Solar Inverter
- New Energy Vehicle Powertrain System
- New Energy Vehicle Charging System
- New Energy Vehicle Motor

INVT Copyright.
Information may be subject to change without notice during product improving.

66003-00140 202407(V3.0)